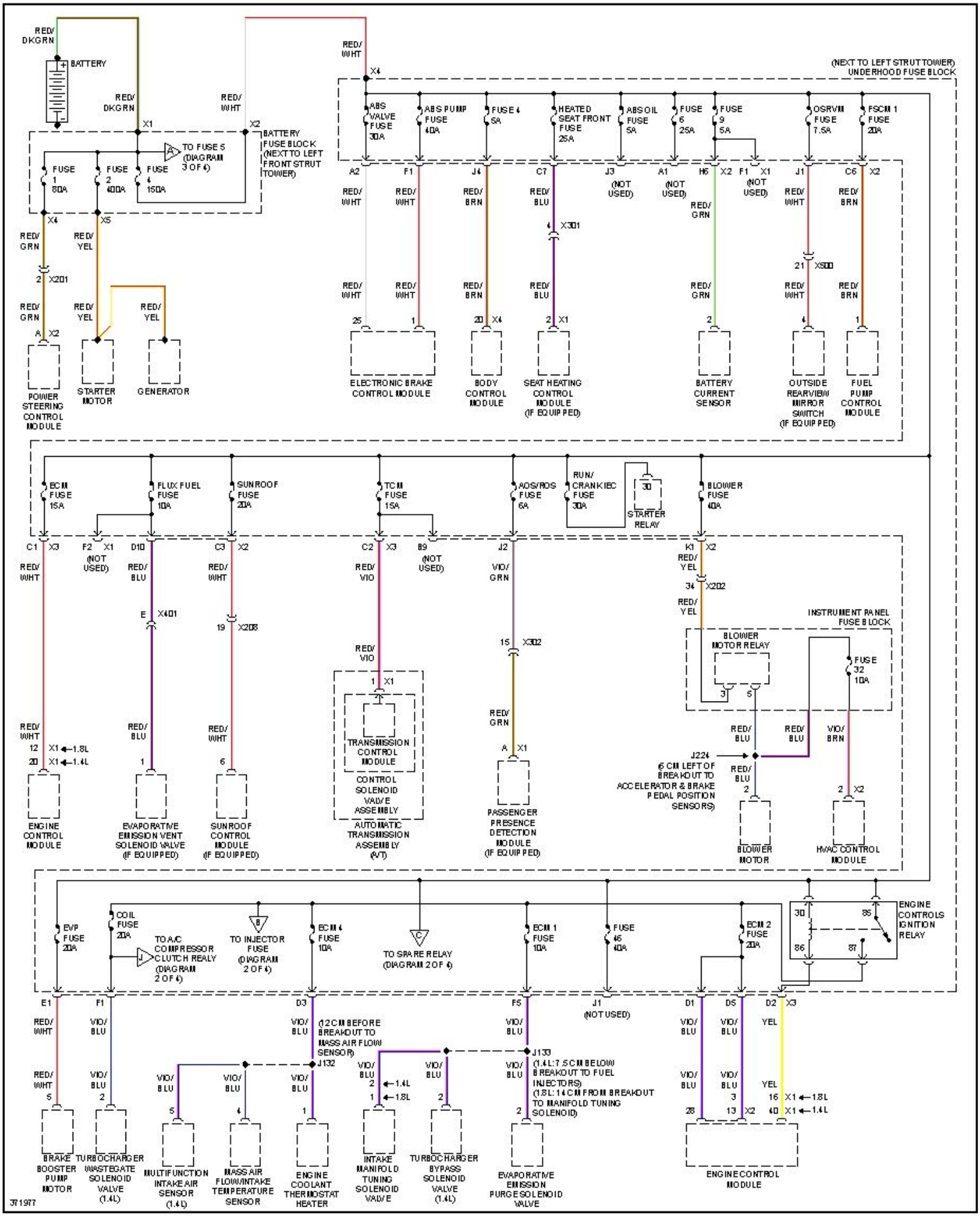
BATTERY
RED/DKGRN
RED/WHT
X1
X2
BATTERY FUSE BLOCK (NEXT TO LEFT FRONT STRUT TOWER)
TO FUSE 5 (DIAGRAM 3 OF 4)
FUSE 1 80A
FUSE 2 40A
FUSE 4 150A
X4
X5
RED/GRN
RED/YEL
X201
POWER STEERING CONTROL MODULE
STARTER MOTOR
GENERATOR
(NEXT TO LEFT STRUT TOWER) UNDERHOOD FUSE BLOCK
ABS VALVE FUSE 30A
ABS PUMP FUSE 40A
FUSE 4 5A
HEATED SEAT FRONT FUSE 25A
ABS OIL FUSE 5A
FUSE 6 25A
FUSE 9 5A
OSRVM FUSE 7.5A
FSCM 1 FUSE 20A
(NOT USED)
X301
X500
ELECTRONIC BRAKE CONTROL MODULE
BODY CONTROL MODULE
SEAT HEATING CONTROL MODULE (IF EQUIPPED)
BATTERY CURRENT SENSOR
OUTSIDE REARVIEW MIRROR SWITCH (IF EQUIPPED)
FUEL PUMP CONTROL MODULE
ECM FUSE 15A
FLUX FUEL FUSE 10A
SUNROOF FUSE 20A
TCM FUSE 15A
AOS/ROS FUSE 6A
RUN/CRANK/EC FUSE 30A
STARTER RELAY
BLOWER FUSE 40A
X401
X208
X302
X202
VIO/GRN
VIO/BRN
INSTRUMENT PANEL FUSE BLOCK
BLOWER MOTOR RELAY
FUSE 32 10A
TRANSMISSION CONTROL MODULE
CONTROL SOLENOID VALVE ASSEMBLY
J224
6 CM LEFT OF BREAKOUT TO ACCELERATOR & BRAKE PEDAL POSITION SENSORS)
ENGINE CONTROL MODULE
EVAPORATIVE EMISSION VENT SOLENOID VALVE (IF EQUIPPED)
SUNROOF CONTROL MODULE (IF EQUIPPED)
AUTOMATIC TRANSMISSION ASSEMBLY (A/T)
PASSENGER PRESENCE DETECTION MODULE (IF EQUIPPED)
BLOWER MOTOR
HVAC CONTROL MODULE
EVP FUSE 20A
COIL FUSE 20A
TO A/C COMPRESSOR CLUTCH REALY (DIAGRAM 2 OF 4)
TO INJECTOR FUSE (DIAGRAM 2 OF 4)
ECM 4 FUSE 10A
TO SPARE RELAY (DIAGRAM 2 OF 4)
ECM 1 FUSE 10A
FUSE 45 40A
ECM 2 FUSE 20A
ENGINE CONTROLS IGNITION RELAY
(12 CM BEFORE BREAKOUT TO MASS AIR FLOW SENSOR)
J132
J133
(1.4 L: 7.5 CM BELOW BREAKOUT TO FUEL INJECTORS)
(1.8 L: 14 CM FROM BREAKOUT TO MANIFOLD TUNING SOLENOID)
BRAKE BOOSTER PUMP MOTOR
TURBOCHARGER WASTEGATE SOLENOID VALVE (1.4L)
MULTIFUNCTION INTAKE AIR SENSOR (1.4L)
MASS AIR FLOW/INTAKE TEMPERATURE SENSOR
ENGINE COOLANT THERMOSTAT HEATER
INTAKE MANIFOLD TUNING SOLENOID VALVE
TURBOCHARGER BYPASS SOLENOID VALVE (1.4L)
EVAPORATIVE EMISSION PURGE SOLENOID VALVE
ENGINE CONTROL MODULE
371977